No Production will commence without approved drawings.

Name .....
Date .....
Signature.....

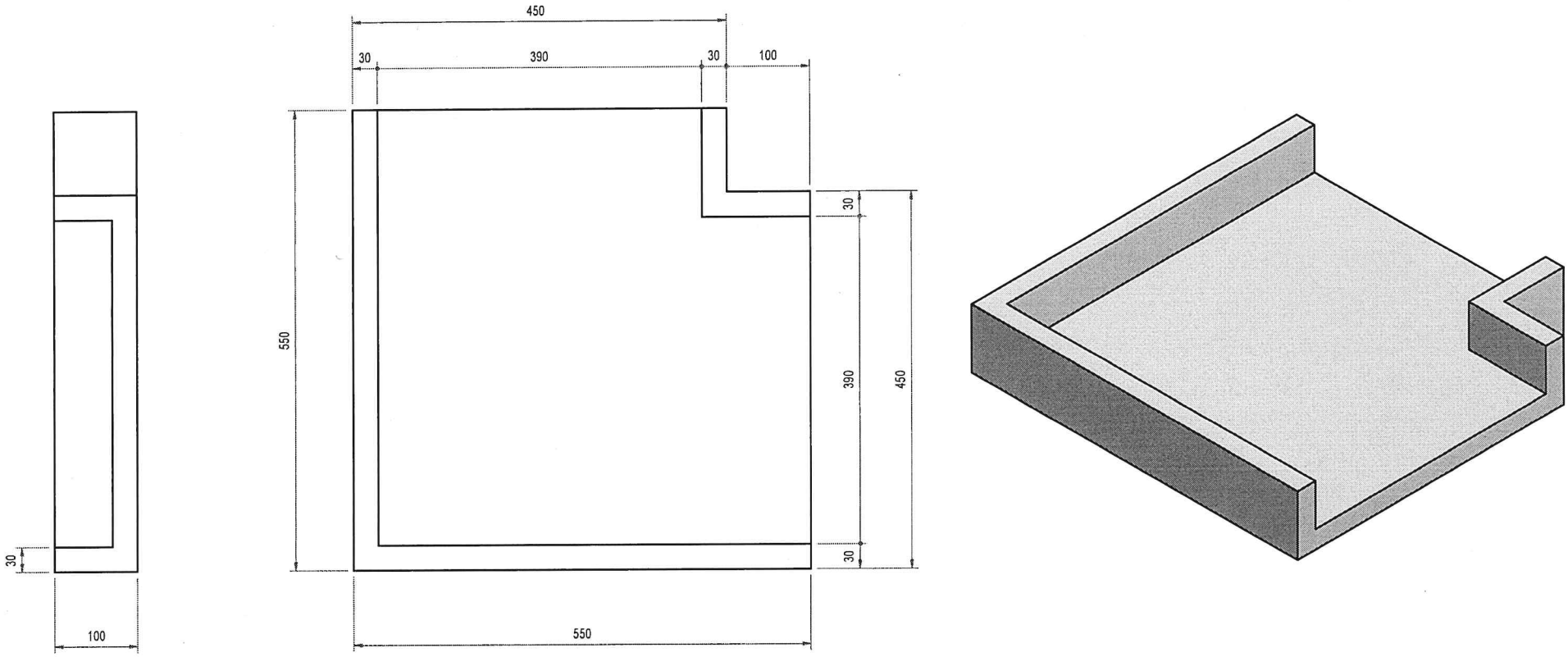

C:\Users\pmds2\Desktop\Shep\cad\Sud Folder\Wet Cast\WC-P0013 - 100 x 280 x 700 Devon Capping - Revelstone\Inside Corner 450\Product\390 Corner Capping.ipt

CLIENT: REVELSTONE

TITLE: 450 INSIDE DEVON CAPPING

SHEET NO: 1 OF 1 A3

REV	DESCRIPTION	DATE

DRAWN	
CHECKED	
APPROVED	
SCALE	

This drawing is the property of [illegible] and must not be made available to third parties or other firms without written permission

DRAWING NO.

REVISION